Large Volume Hot Water Storage Tanks
Tank Model TSH720-B*

TECHNICAL DATA	
CAPACITY:	720 Gallon
CONFIGURATION:	Horizontal
INTERIOR (LINING):	*Glass or Epoxy
EXTERIOR:	Red Oxide Primer
DESIGN PRESSURE	125 psi
DESIGN BUILD:	ASME Section IV HLW Carbon Steel
WEIGHT:	1170 lbs

* 1 = 10 Mils Glass Thickness; 2 = 20 Mils Glass Thickness; E = Epoxy

DIMENSIONS		
ID	**DESCRIPITON**	**DIMENSION**
A	Height, Overall	51"
B	Diameter	42"
C	Length, Overall	129"
D	Circulation, Conn. To Tank Centerline	48"
E	Saddle Support, Distance Between	72"
F	Saddle Support, Width	36-3/4"

SUBMITTAL	
JOB NAME:	
LOCATION:	
ENGINEER:	
WHOLESALER:	
CONTRACTOR:	
DATE:	

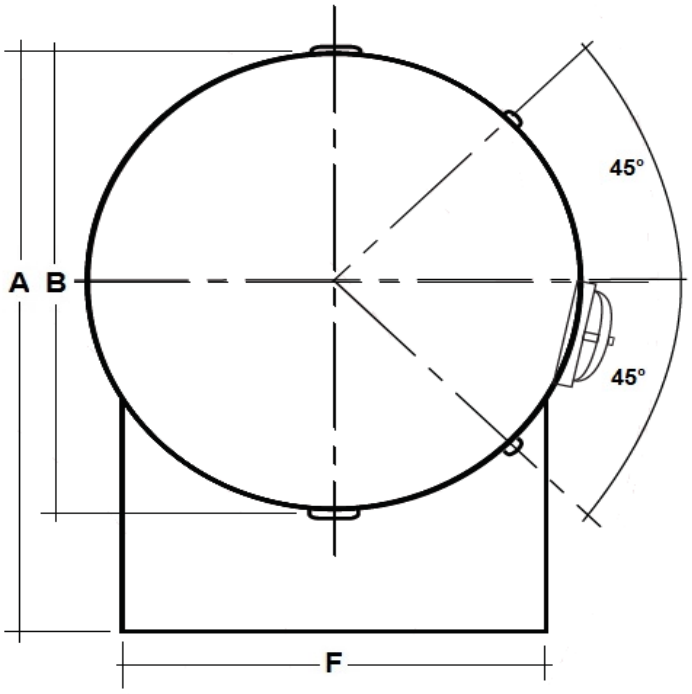

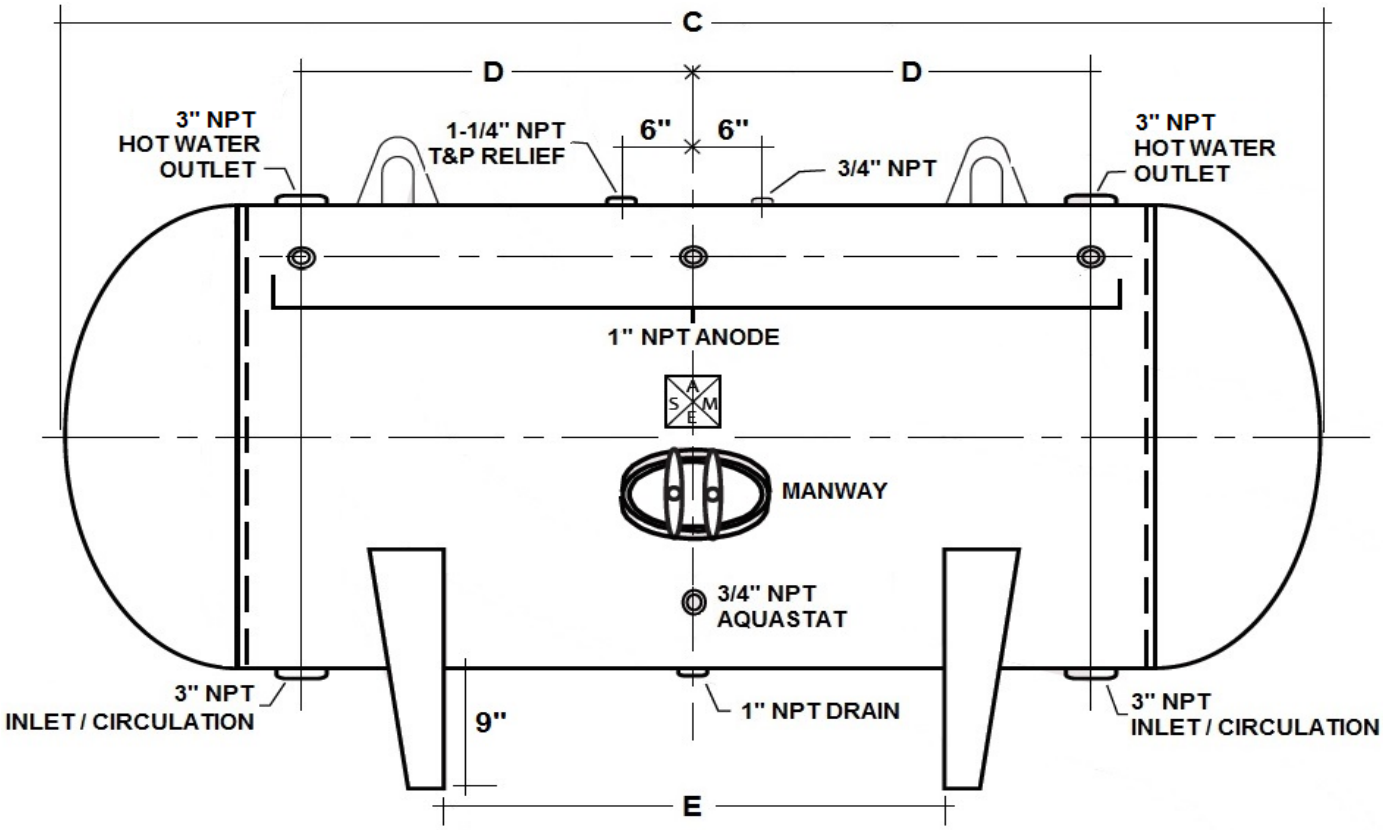

Notes:
1) Tank information is subject to change without notice.
2) Tank options are available; Consult Factory.